- Advanced Static Routing Lab -

Advanced Static Routing – Lab

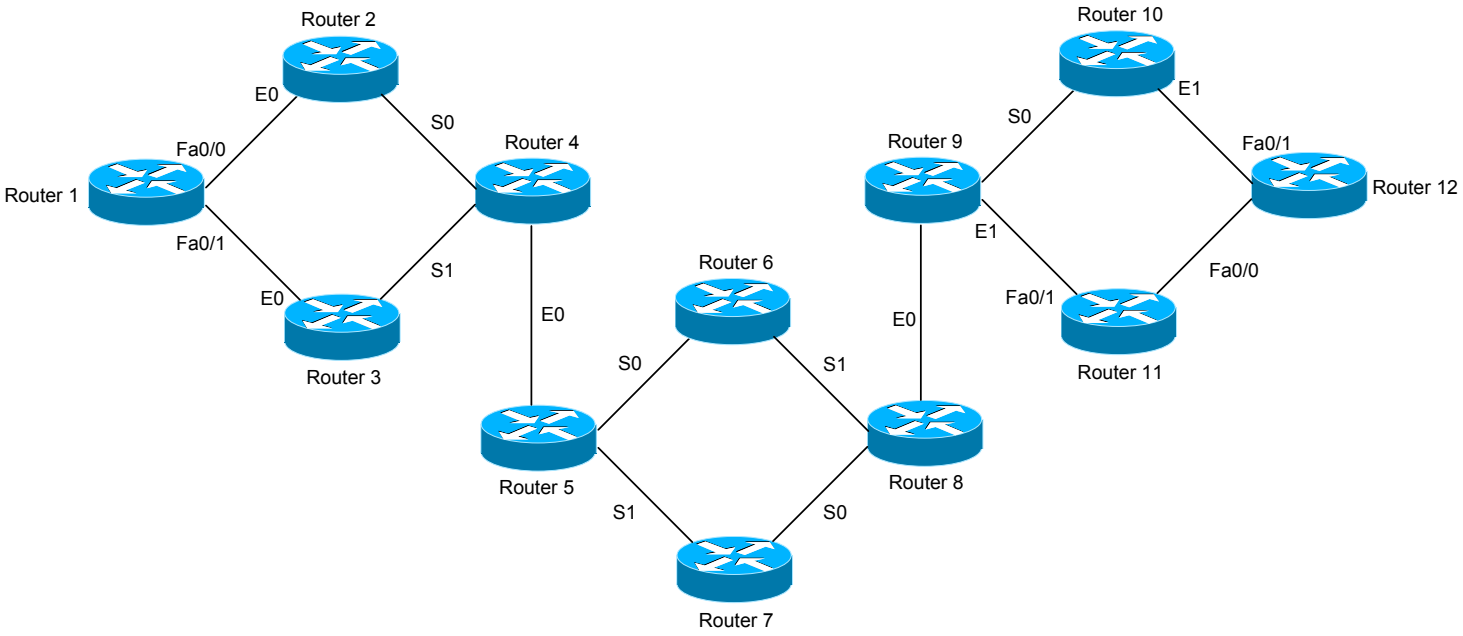

Basic Objectives:

1. Configure and cable the Serial/Ethernet interfaces as indicated in the above diagram.

2. Configure the IP addresses on the routers using the following 192.168.YY.x/24 scheme:

Router 1 – 2 = 192.168.12.x	Router 6 – 8 = 192.168.68.x
Router 1 – 3 = 192.168.13.x	Router 7 – 8 = 192.168.78.x
Router 2 – 4 = 192.168.24.x	Router 8 – 9 = 192.168.89.x
Router 3 – 4 = 192.168.34.x	Router 9 – 10 = 192.168.109.x
Router 4 – 5 = 192.168.45.x	Router 9 – 11 = 192.168.119.x
Router 5 – 6 = 192.168.56.x	Router 10 – 12 = 192.168.120.x
Router 5 – 7 = 192.168.57.x	Router 11 – 12 = 192.168.121.x

3. Configure a loopback interface on each router. The interface should have an address using the following scheme: Y.Y.Y.Y/24. For example, Router 4's loopback should be 4.4.4.4/24.

* * *

All original material copyright © 2006 by Aaron Balchunas (aaron@routeralley.com), unless otherwise noted. All other material copyright © of their respective owners.
This material may be copied and used freely, but may not be altered or sold without the expressed written consent of the owner of the above copyright. Updated material may be found at http://www.routeralley.com.

Advanced Static Routing – Lab

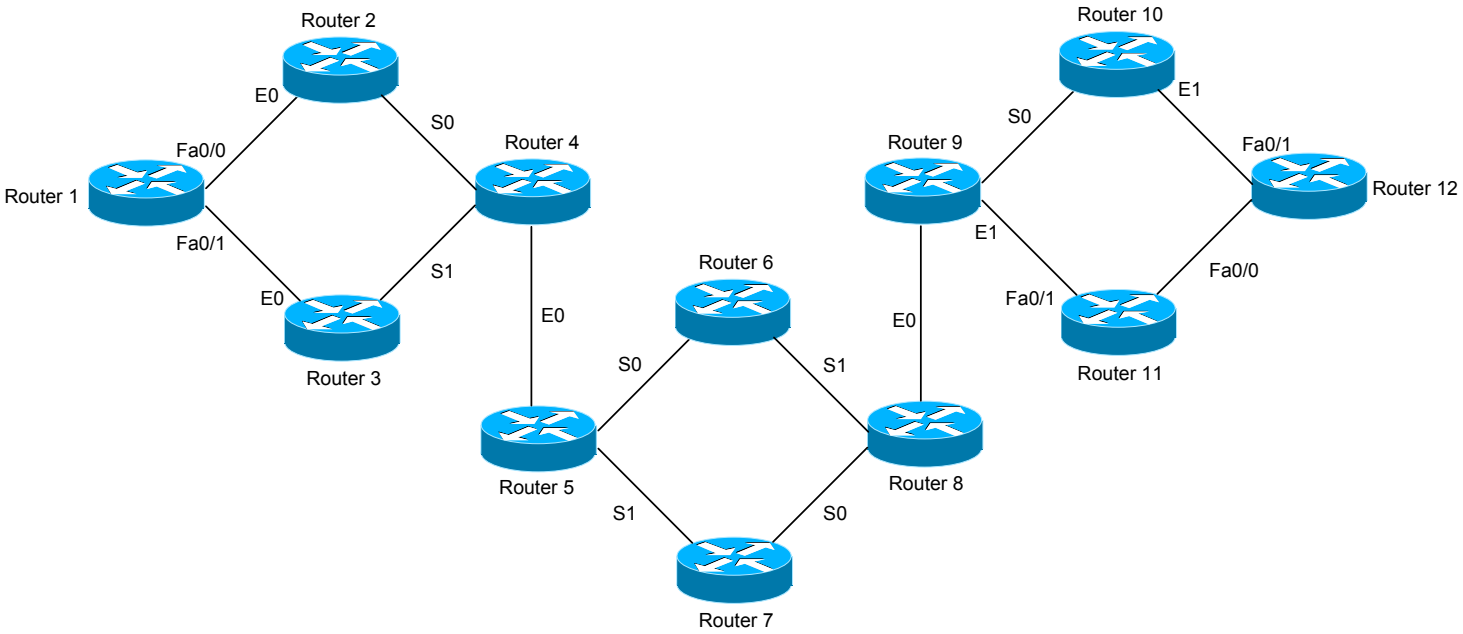

Static Routing Objectives:

4. Configure static routes to all networks. Each route should use the *least* amount of hops to get to its destination. You must be able to ping every loopback interface from every router once this lab is complete.

* * *

All original material copyright © 2006 by Aaron Balchunas (aaron@routeralley.com), unless otherwise noted. All other material copyright © of their respective owners.
This material may be copied and used freely, but may not be altered or sold without the expressed written consent of the owner of the above copyright. Updated material may be found at http://www.routeralley.com.

Advanced Static Routing – Lab

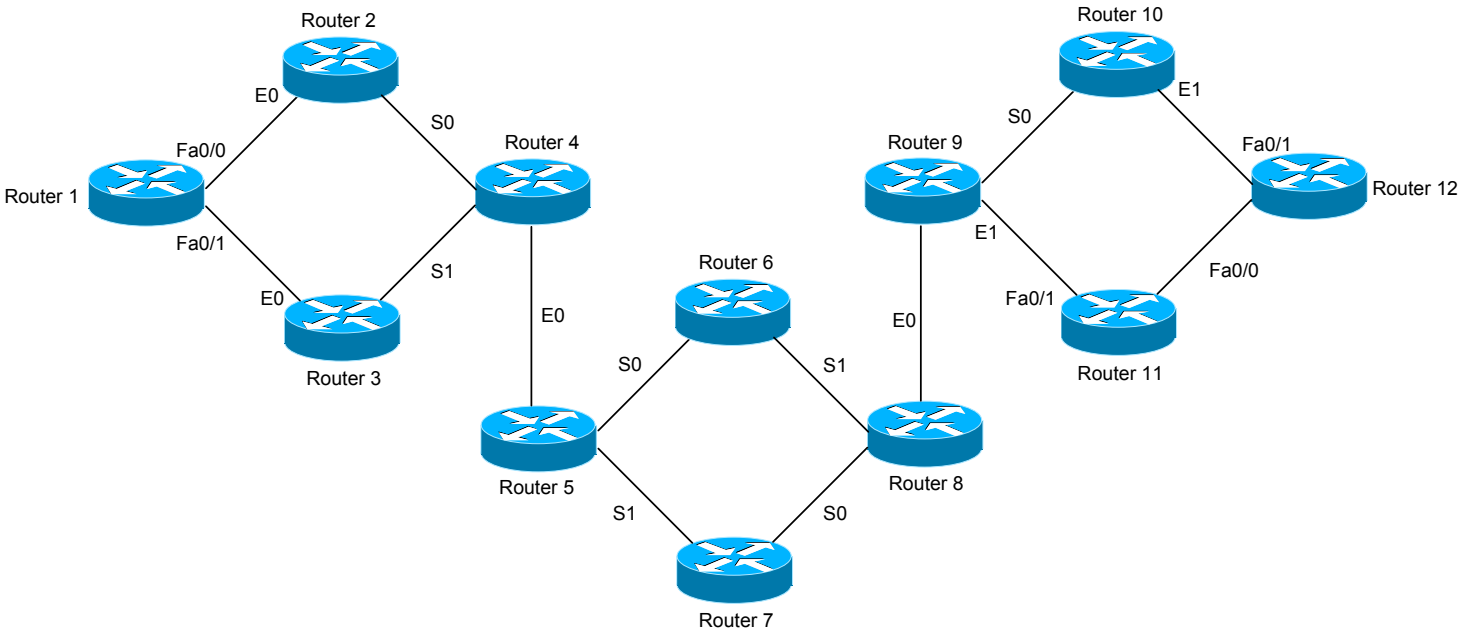

Static Routing Objectives:

5. Configure a *backup* static route to each destination. Configure this route in such a way that it will *only* become active if the primary route is removed from the routing table. Important: ensure that a routing loop *will not* occur if a primary route fails.

* * *

All original material copyright © 2006 by Aaron Balchunas (aaron@routeralley.com), unless otherwise noted. All other material copyright © of their respective owners.
This material may be copied and used freely, but may not be altered or sold without the expressed written consent of the owner of the above copyright. Updated material may be found at http://www.routeralley.com.